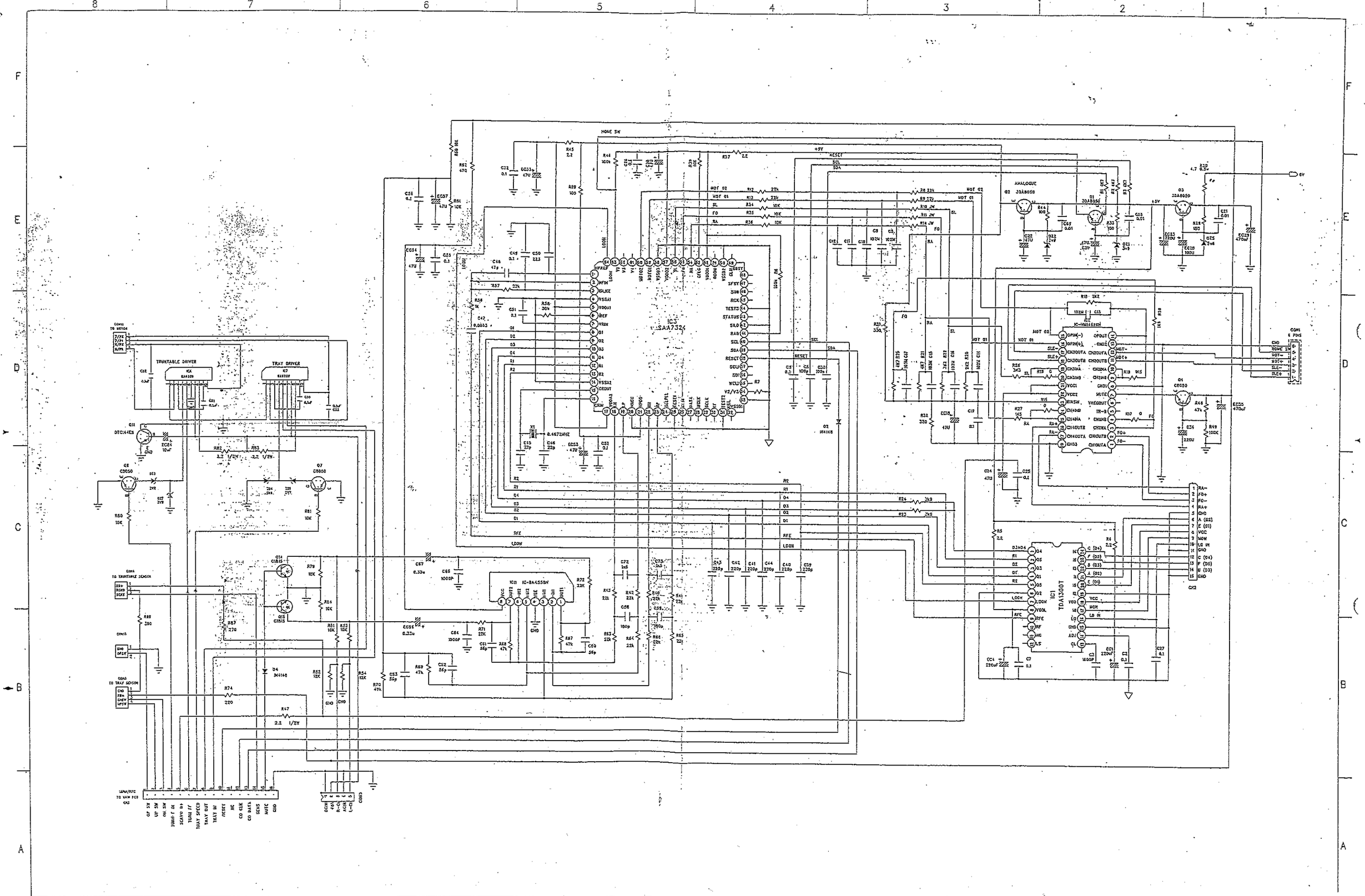

NO	DATE	REVISE	NO	DATE	REVISE	NO	DATE	REVISE	NO	DATE	REVISE	NO	DATE	REVISE	NO	DATE	REVISE	NO	DATE	REVISE	NO	DATE	REVISE	NO	DATE	REVISE	NO	DATE	REVISE	NO	DATE	REVISE	NO	DATE	REVISE	CHECKED	DRAWN

TREVI MCX 1080

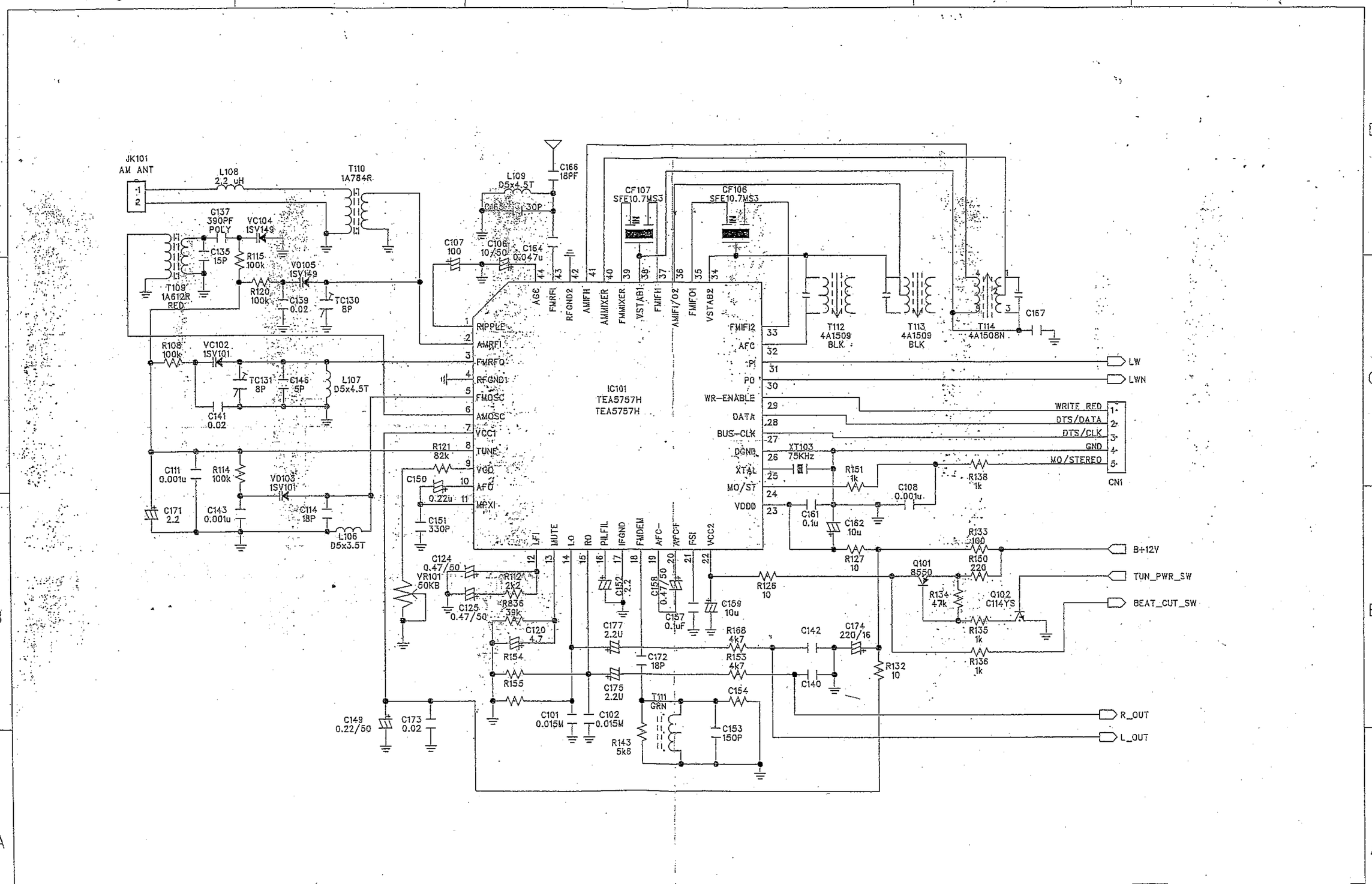

NO	DATE	REVISE	NO	DATE	REVISE	NO	DATE	REVISE	NO	DATE	REVISE	NO	DATE	REVISE	NO	DATE	REVISE	CHECKED	DRAWN

COMPAN **TREVI MCX 1080**

TITLE: CD-2775P TUNER

DWG NO:	FILE NAME: 2775PTU
MODEL:CD2773/CD2775P	SCALE:
SHEET: 3 OF 5	SIZE: A3

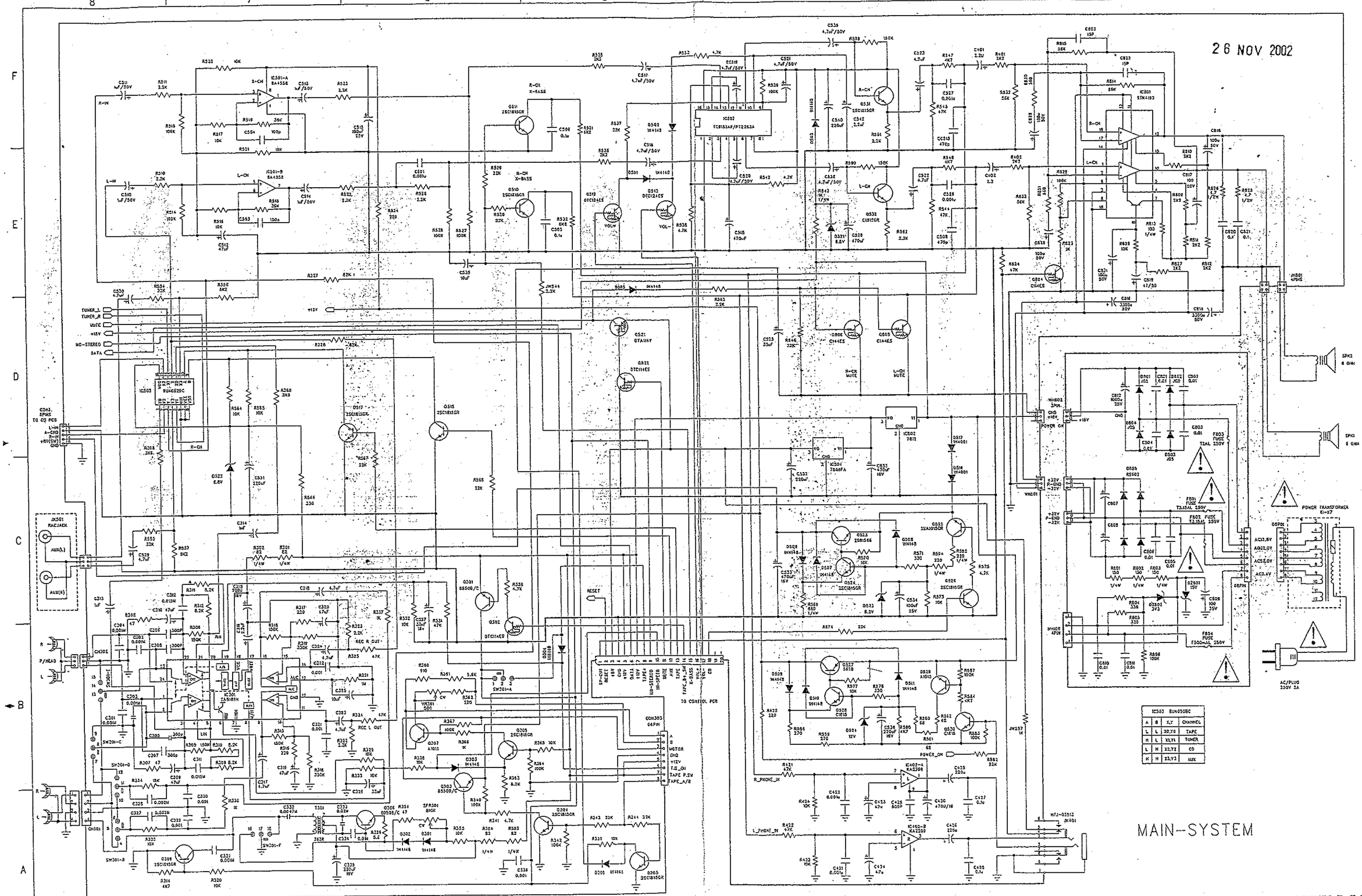
26 NOV 2002
MAIN-SYSTEM
TREVI MCX 1080
IC503 BU4052BC
A B X,Y CHANNEL
L L X0,Y0 TAPE
H L X1,Y1 TUNER
L H X2,Y2 CD
H H X3,Y3 AUX
REMARKS : In the circuit diagram, somewhere circuitry either part type (value) or connection may need to be modified after further study on the entire product circuit designed.
NO DATE REVISE
1 11/12 08
2 25/11 8/C2
CHECKED
DRAWN
DWG NO: 3
FILE NAME: 273EM2
MODEL:CD2373/CD2275A
SCALE:
SHEET: 1 OF 5
SIZE: A1

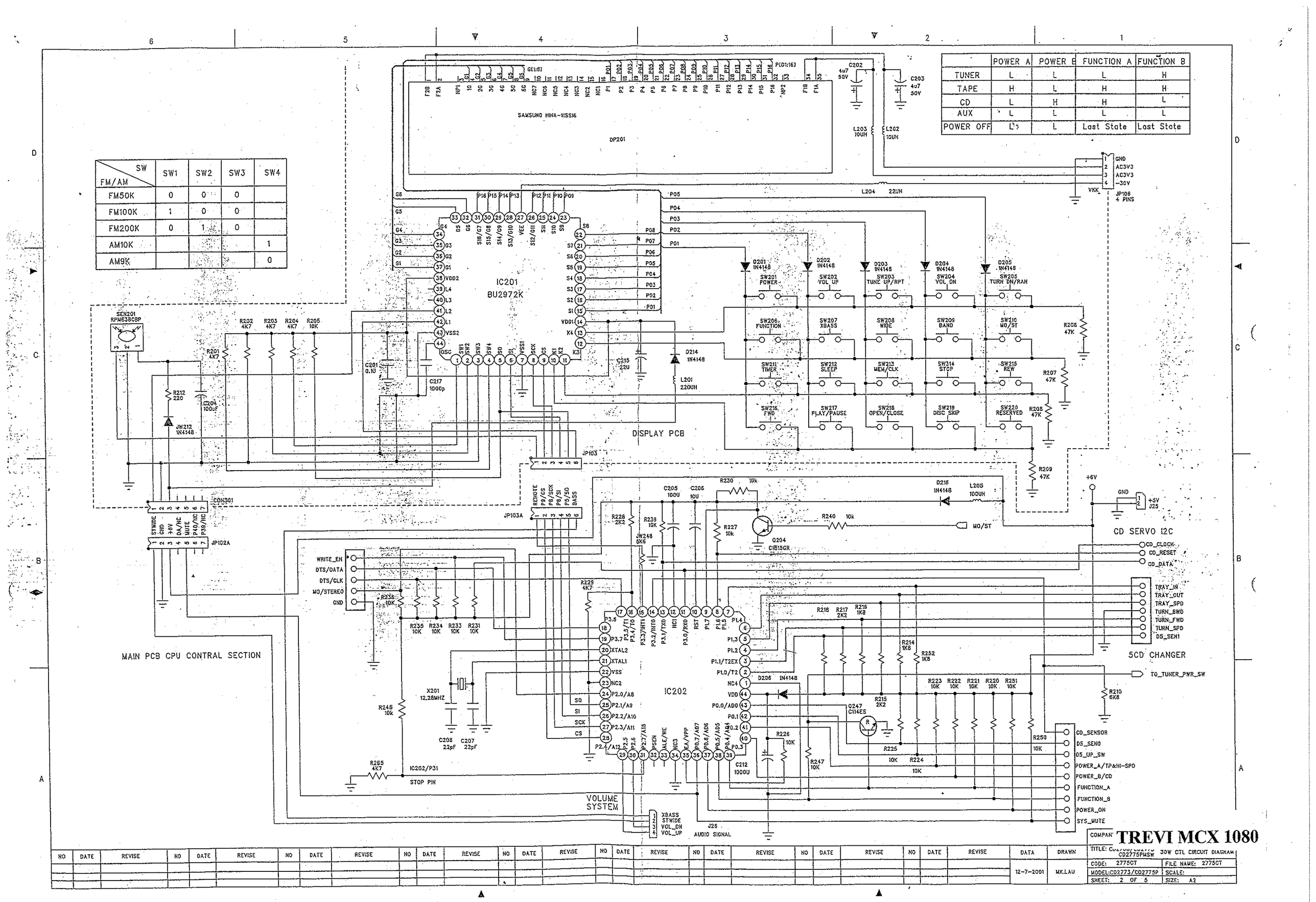

	POWER A	POWER B	FUNCTION A	FUNCTION B
TUNER	L	L	L	H
TAPE	H	L	H	H
CD	L	H	H	L
AUX	L	L	L	L
POWER OFF	L	L	Last State	Last State

SW / FM/AM	SW1	SW2	SW3	SW4
FM50K	0	0	0	
FM100K	1	0	0	
FM200K	0	1	0	
AM10K				1
AM9K				0

NO	DATE	REVISE	NO	DATE	REVISE	NO	DATE	REVISE	NO	DATE	REVISE	NO	DATE	REVISE	NO	DATE	REVISE	NO	DATE	REVISE	NO	DATE	REVISE	NO	DATE	REVISE	DATA	DRAWN
																											12-7-2001	MK.LAU

COMPANY: **TREVI MCX 1080**

TITLE: CD2773/CD2775 CD2775PMSW 30W CTL CIRCUIT DIAGRAM

CODE: 2775CT | FILE NAME: 2775CT

MODEL: CD2773/CD2775P | SCALE:

SHEET: 2 OF 5 | SIZE: A2